Outline Drawing
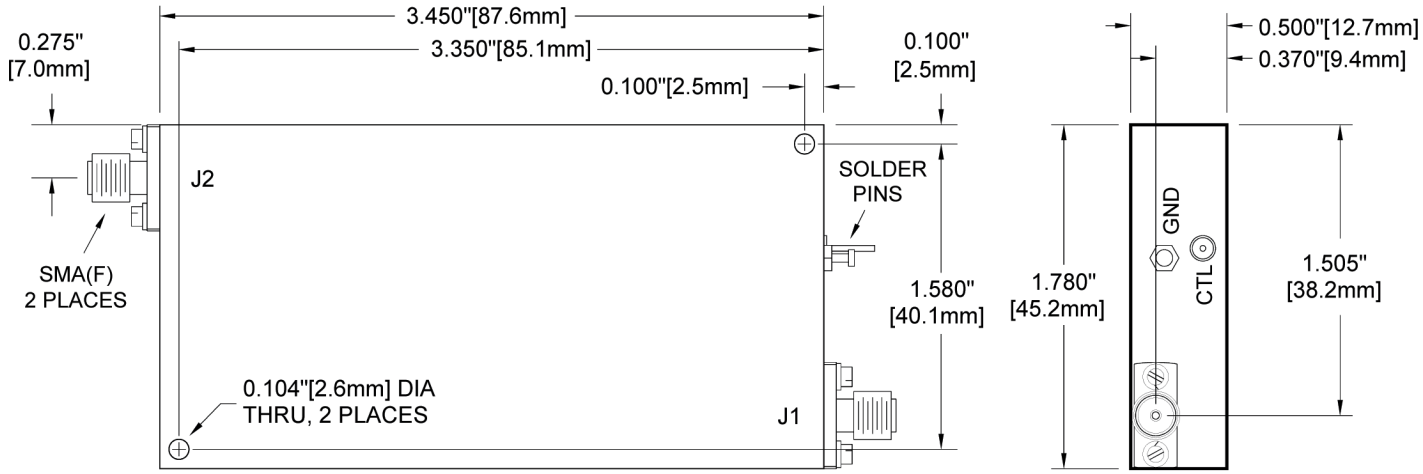
AT-B000-HC