IMPULSE TECHNOLOGIES INC.
AN INTERNATIONAL COMPANY
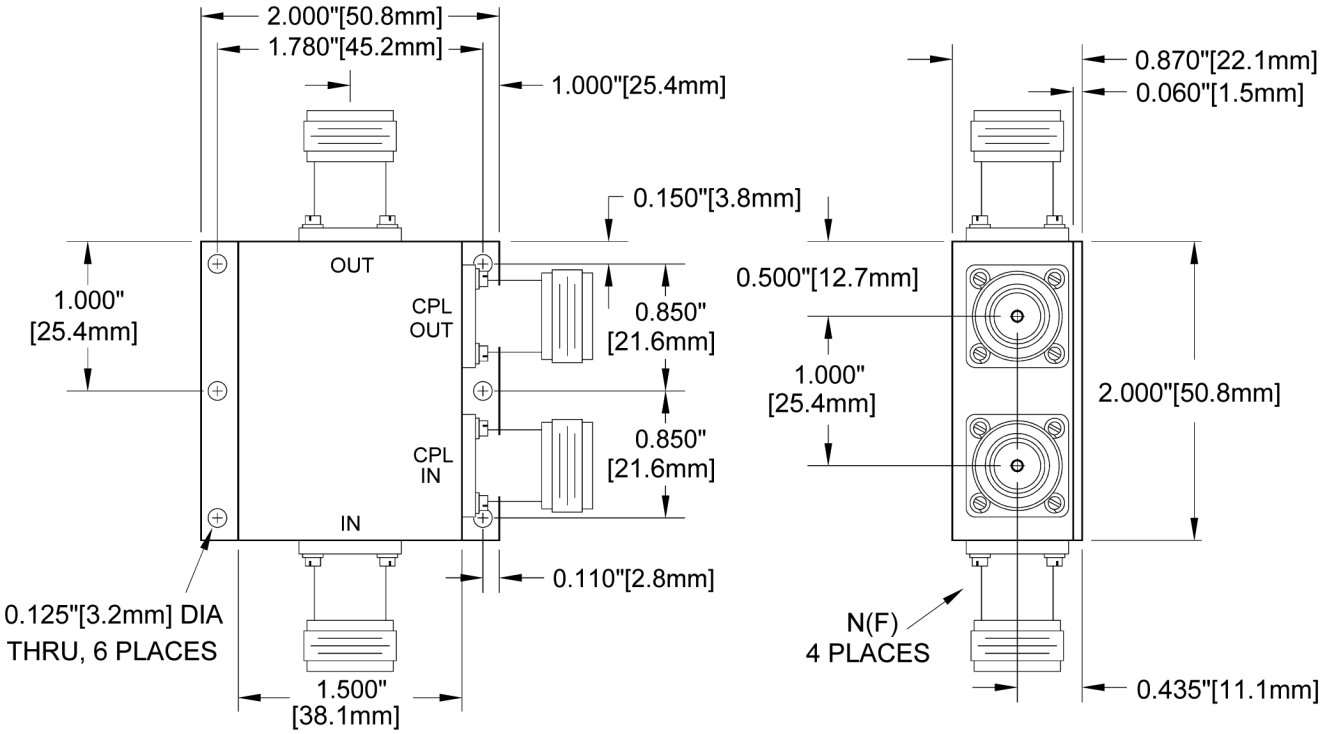
Outline Drawing
(Dual Directional Coupler)