DWG NO.	REV
2019–01	3

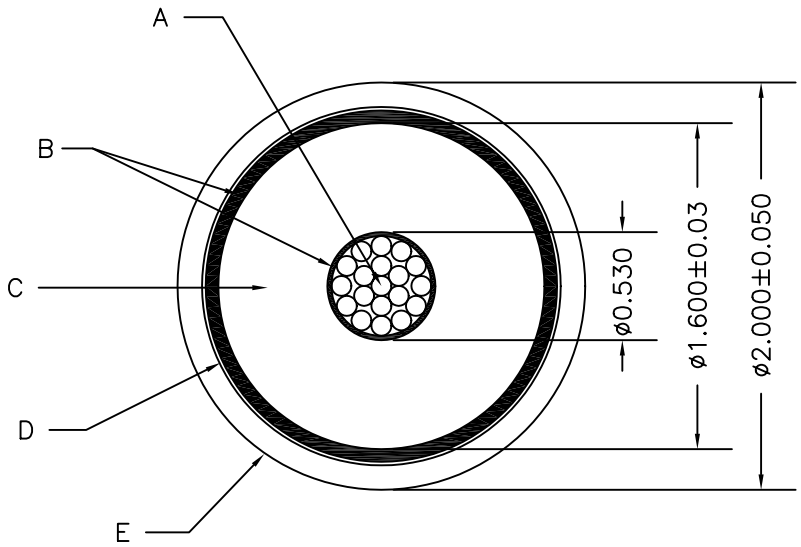

LEGEND

A. 4/O AWG, 19 STRAND COMPRESSED COPPER, ø0.49

B. SEMICONDUCTIVE POLYETHYLENE
0.020 WALL STRAND SHIELD
0.062 WALL INSULATED SHIELD

C. CROSS–LINKED POLYETHYLENE, 0.535 WALL NOM.

D. 2X 0.004 COPPER TAPE, DEAD SOFT, HELICALLY APPLIED

E. POLYETHYLENE JACKET, BLACK, 0.125 WALL

REF: Z=40 OHMs

REVISIONS

REV	ECO NUMBER	APPD	DATE
–	RELEASE DRAWING		
3	PER ECO NUMBER 1700	D.L.	04APR06

THIS DOCUMENT AND THE INFORMATION CONTAINED IN IT ARE THE PROPERTY OF DIELECTRIC SCIENCES, INC AND SHALL NOT BE REPRODUCED OR COPIED OR USED AS THE BASIS FOR THE MANUFACTURE OF APPARATUS WITHOUT PERMISSION.

UNLESS OTHERWISE SPECIFIED

DIMENSIONS ARE IN INCHES
TOLERANCE ON

DECIMALS	ANGLES
.XX ±.01	±
.XXX ±.005	

CONCENTRICITY .005 TIR
REMOVE BURRS & SHARP EDGES
ALL MACHINE SURFACES 125√

DRAWN	JAG	DATE	01MAR74
CHECKED		DATE	
APPROVED		DATE	
MATERIAL			
FINISH			

DIELECTRIC SCIENCES,INC
CHELMSFORD, MASSACHUSETTS 01824

CABLE: 300 KVDC

SIZE	FSCM NO.	DWG NO.	REV
A	50509	2019–01	3

SCALE

SHEET 1 OF 1