DWG NO.	REV
2149	

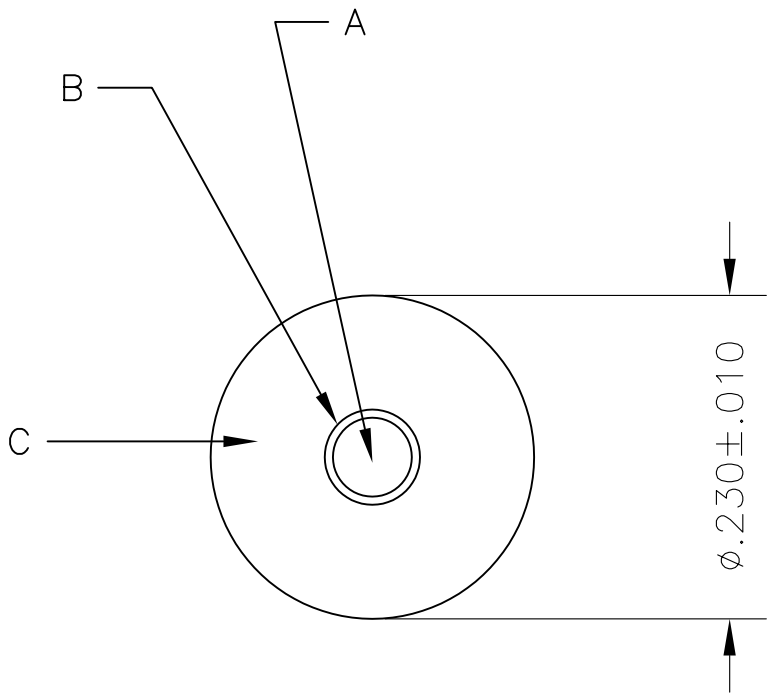

LEGEND

A. #18 AWG (19/30) T.C.

B. SEMICON POLYETHYLENE TO ø.080

C. LDHMW NATURAL POLYETHYLENE TO ø.230±.010

NOTES:

1. TEST VOLTAGE: 70KVDC– 10 MINUTES

REVISIONS

REV	ECO NUMBER	APPD	DATE
–	RELEASE DRAWING		

THIS DOCUMENT AND THE INFORMATION CONTAINED IN IT ARE THE PROPERTY OF DIELECTRIC SCIENCES, INC AND SHALL NOT BE REPRODUCED OR COPIED OR USED AS THE BASIS FOR THE MANUFACTURE OF APPARATUS WITHOUT PERMISSION.

UNLESS OTHERWISE SPECIFIED

DIMENSIONS ARE IN INCHES
TOLERANCE ON

DECIMALS	ANGLES
.XX ±.01	±
.XXX ±.005	

CONCENTRICITY .005 TIR
REMOVE BURRS & SHARP EDGES
ALL MACHINE SURFACES 125√

DO NOT SCALE THIS DRAWING

DRAWN	O. ABDULKY	DATE	29MAY05
CHECKED		DATE	
APPROVED		DATE	
MATERIAL			
FINISH			

DIELECTRIC SCIENCES,INC
CHELMSFORD, MASSACHUSETTS 01824

INSULATED LEAD 60KVDC

SIZE	FSCM NO.	DWG NO.	REV
A	50509	2149	

SCALE | SHEET 1 OF 1