DWG NO.	REV
2176	2

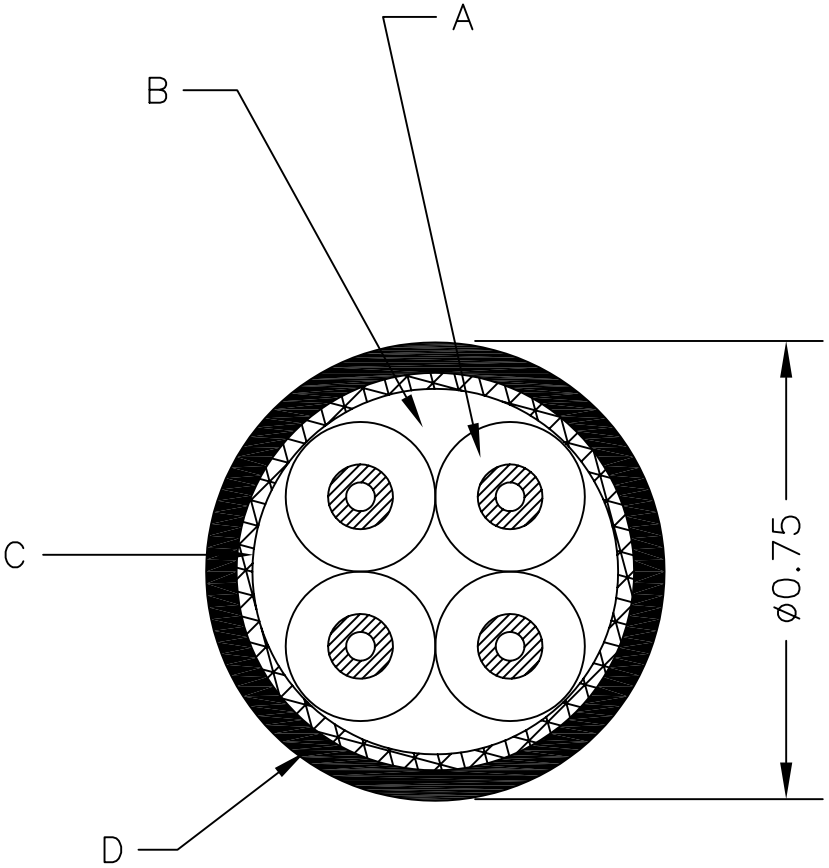

LEGEND

A. 4X #18 AWG (19/30 SPC) SEMICON SILICONE,
SILICONE INSULATION TO ø0.235 INCH W/ OUTER SEMICON INK.

B. FILLER MATERIAL W/ OVERALL CLEAR MYLAR TAPE.

C. 34 AWG TC BRAID SHIELD 90% COVERAGE.

D. BLACK PVC JACKET 0.05 WALL.

REVISIONS

REV	ECO NUMBER	APPD	DATE
–	RELEASE DRAWING		

THIS DOCUMENT AND THE INFORMATION CONTAINED IN IT ARE THE PROPERTY OF DIELECTRIC SCIENCES, INC AND SHALL NOT BE REPRODUCED OR COPIED OR USED AS THE BASIS FOR THE MANUFACTURE OF APPARATUS WITHOUT PERMISSION.

UNLESS OTHERWISE SPECIFIED

DIMENSIONS ARE IN INCHES
TOLERANCE ON

DECIMALS	ANGLES
.XX ±.01	±
.XXX ±.005	

CONCENTRICITY .005 TIR
REMOVE BURRS & SHARP EDGES
ALL MACHINE SURFACES 125√

DO NOT SCALE THIS DRAWING

DRAWN	O. ABDULKY	DATE	18AUG03
CHECKED	DJ LEARY	DATE	18AUG03
APPROVED		DATE	
MATERIAL			
FINISH			

DIELECTRIC SCIENCES,INC
CHELMSFORD, MASSACHUSETTS 01824

40 KV, 4/C COMPOSITE CABLE

SIZE	FSCM NO.	DWG NO.	REV
A	50509	2176	2

SCALE | SHEET 1 OF 1