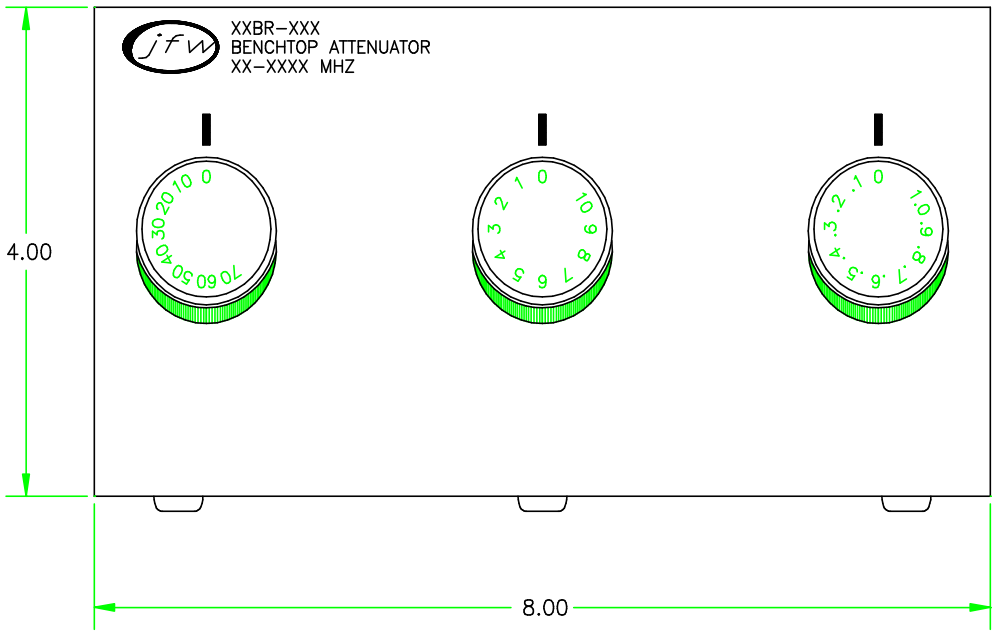

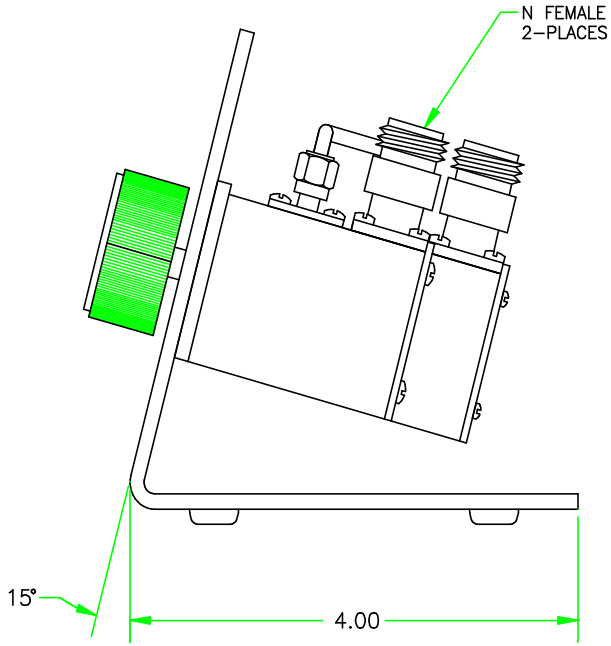

KNOB SCREENING PER MODEL – 0–81dB SHOWN

NOTE: AVAILABLE WITH BNC, N, SMA, OR TNC CONNECTORS

JFW INDUSTRIES, INC.
INDIANAPOLIS, IN

REV	ECN	DATE	BY
A	2307	1–3–89	TEZ
B	7562	9–30–03	BZ
C	10840	3–16–05	LT
D	12635	4–20–06	ETW

DRAWN BY: B. ZEIHEN
DATE: 9–30–03
APP'D BY:
SCALE: FULL
MATERIAL: ALUMINUM ALLOY
FINISH: CHEMFILM TCP
DESCRIPTION: XXBR–XXX: BENCH ROTARY ATTEN.

PROPRIETARY INFORMATION
ALL SURFACES ARE TO BE FREE OF BURRS, PITS, & SCRATCHES
TOLERANCES
FRACTIONAL DIM. ± 1/64
2 PLACE DECIMAL ± .010
3 PLACE DECIMAL ± .005
ANGULAR DIM. ± 1/2 °
DWG NO. 092–1085