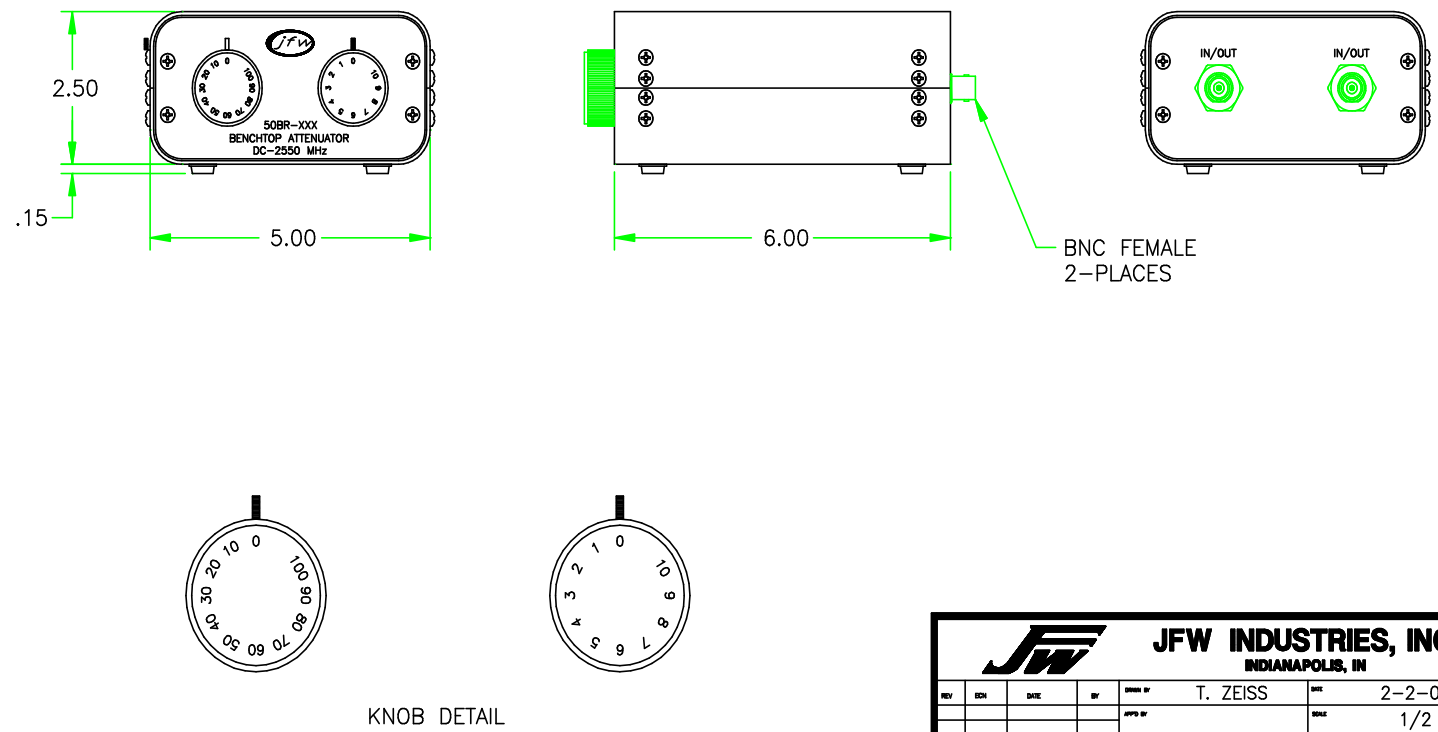

JFW INDUSTRIES, INC.
INDIANAPOLIS, IN

REV	ECN	DATE	BY

DRAWN BY: T. ZEISS — DATE: 2-2-04
APP'D BY: — SCALE: 1/2
MATERIAL: ALUMINUM ALLOY
FINISH: BLACK PAINT/FRONT & REAR: LIGHT GRAY PAINT
DESCRIPTION: 50BR-XXX 0-110dB BENCH MOUNT ATTEN.

PROPRIETARY INFORMATION
ALL SURFACES ARE TO BE FREE OF BURRS, PITS, & SCRATCHES
TOLERANCES
FRACTIONAL DIM. ± 1/64
2 PLACE DECIMAL ± .010
3 PLACE DECIMAL ± .005
ANGULAR DIM. ± 1/2°
DWG NO. 092-4394