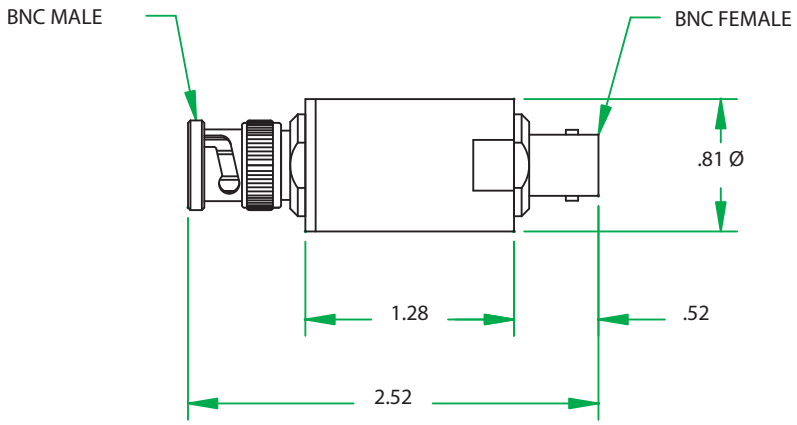

JFW INDUSTRIES, INC.
INDIANAPOLIS, IN

REV	ECN	DATE	BY

DRAWN BY	T. ZEISS	DATE	11-20-06
APP'D BY		SCALE	FULL
MATERIAL	BRASS		
FINISH	NICKEL		
DESCRIPTION	BNC MALE / BNC FEMALE		

PROPRIETARY INFORMATION

ALL SURFACES ARE TO BE FREE OF BURRS, PITS, & SCRATCHES

TOLERANCES

FRACTIONAL DIM. ± 1/64

2 PLACE DECIMAL ±.010

3 PLACE DECIMAL ±.005

ANGULAR DIM. ± 1/2°

DWG NO. 092-5252