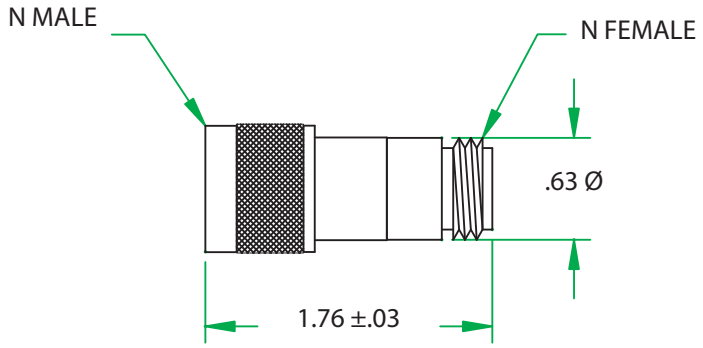

JFW INDUSTRIES, INC.
INDIANAPOLIS, IN

REV	ECN	DATE	BY

DRAWN BY	L. TABOR	DATE	8-22-05
APP'D BY		SCALE	FULL
MATERIAL	BODY: STAINLESS STEEL/CONTACT: BeCu		
FINISH	BODY: PASSIVATED/CONTACT: GOLD		
DESCRIPTION	50DB-011: DC BLOCK		

PROPRIETARY INFORMATION

ALL SURFACES ARE TO BE FREE OF BURRS, PITS, & SCRATCHES

TOLERANCES

FRACTIONAL DIM. ± 1/64

2 PLACE DECIMAL ±.010

3 PLACE DECIMAL ±.005

ANGULAR DIM. ± 1/2°

DWG NO. 092-4903