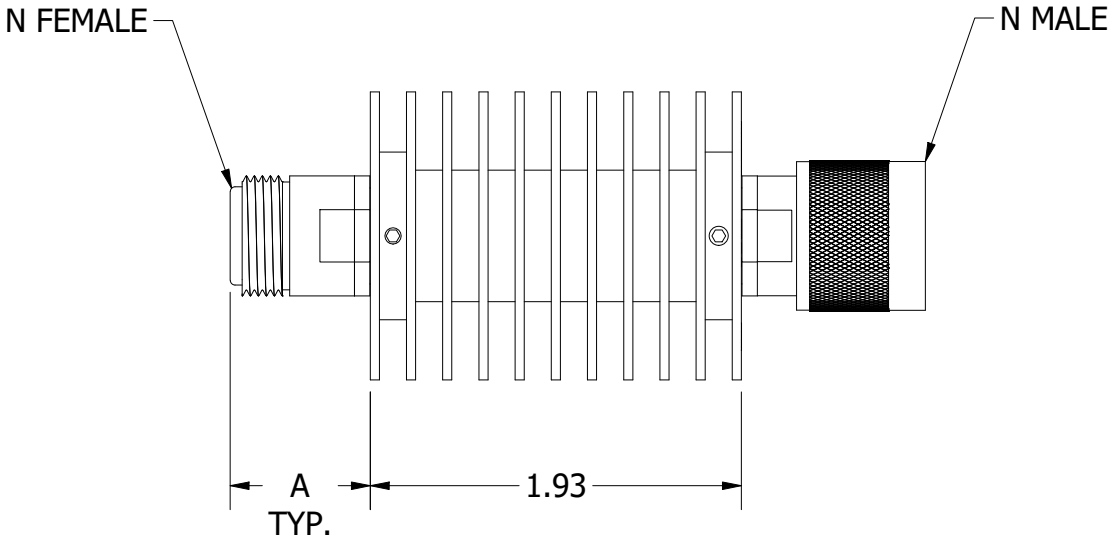


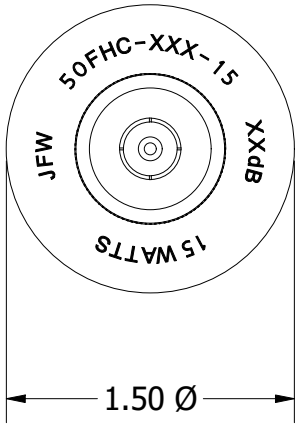


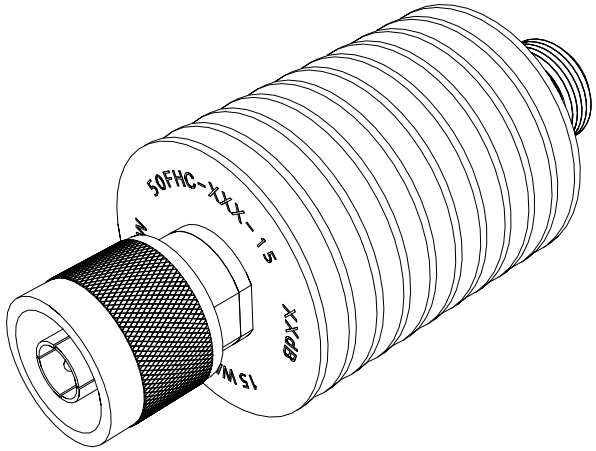


| CONNECTOR | DIM. A ±.03 |
|---|---|
| SMA MALE | .56 |
| SMA FEMALE | .52 |
| BNC MALE | .80 |
| BNC FEMALE | .60 |
| TNC MALE | .80 |
| TNC FEMALE | .60 |
| N MALE | .96 |
| N FEMALE | .73 |
| 7/16 MALE | 1.31 |
| 7/16 FEMALE | 1.22 |
| 4.1/9.5 MALE | .96 |
| 4.1/9.5 FEMALE | .96 |
| 4.3/10 MALE | 1.06 |
| 4.3/10 FEMALE | 1.02 |

* INSERT NOMINAL dB VALUE i.e. 006 = 6dB

| REV | ECN | DATE | BY | APPR |
|---|---|---|---|---|
| - | ISSUED | 3-3-10 | TEZ | TEZ |
| A | 21350 | 3-2-12 | JZ | TEZ |
| B | 21671 | 6-20-12 | JZ | TEZ |
| C | 26009 | 12-14-15 | JZ | TEZ |
| D | 24444 | 9-5-19 | GM | JZ |

**JFW INDUSTRIES, INC.**

*www.jfwindustries.com* PH: 317-887-1340

| | | | |
|---|---|---|---|
| MATERIAL | ALUMINUM ALLOY | | PROPRIETARY INFORMATION |
| FINISH | BLACK ANODIZE | | ALL SURFACES ARE TO BE FREE OF BURRS, PITS & SCRATCHES |
| MODEL | 50FHC-XXX-15 * | SCALE FULL | TOLERANCES .XX±.010 .XXX±.005 XX°±.5° |
| DESCRIPTION | 15 WATT FIXED ATTENUATOR | | DWG # 092-1472 |