UNCONTROLLED DRAWING

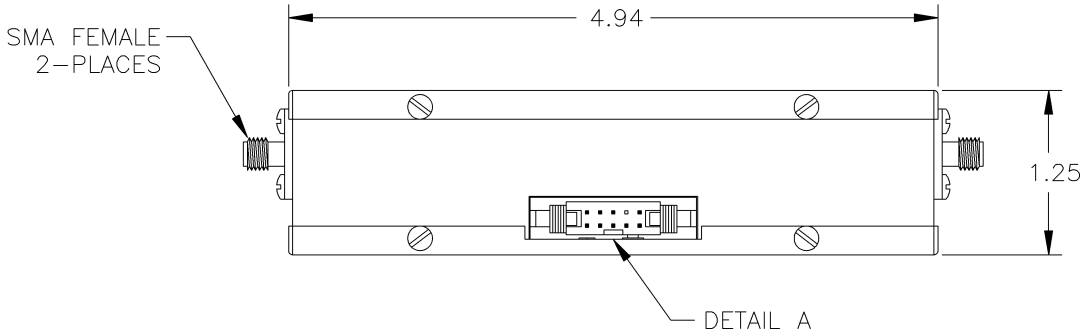

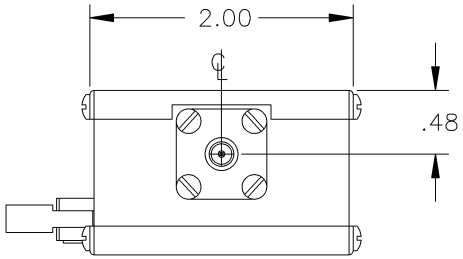

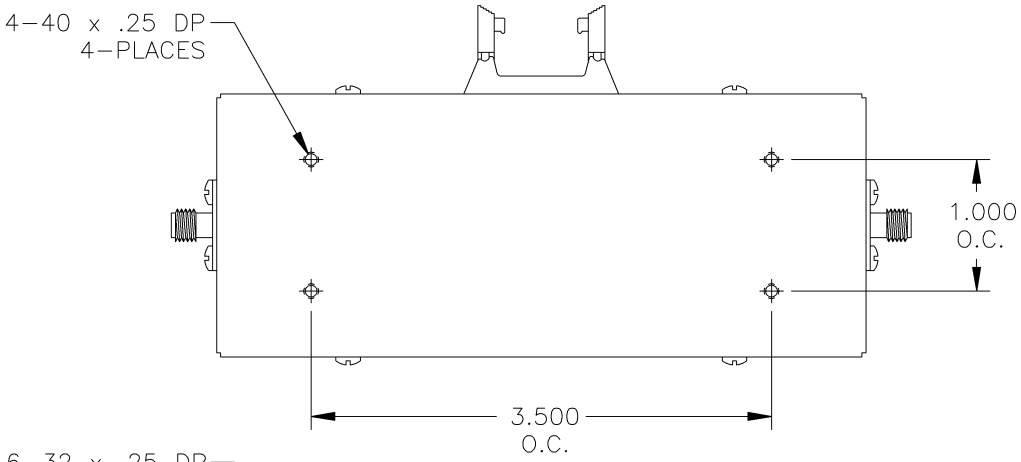

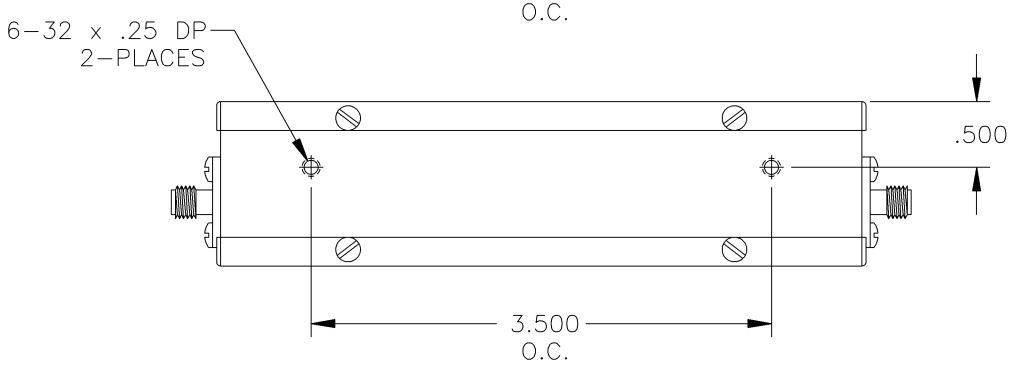

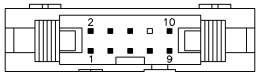

DETAIL A
3M# 3793-5303

PIN	FUNCTION
1	.5dB TTL CONTROL
2	1dB TTL CONTROL
3	2dB TTL CONTROL
4	4dB TTL CONTROL
5	8dB TTL CONTROL
6	16dB TTL CONTROL
7	32dB TTL CONTROL
8	
9	+5 Vdc
10	GROUND

JFW INDUSTRIES, INC.
INDIANAPOLIS, IN

REV	ECN	DATE	BY

DRAWN BY	B. ZEIHEN	DATE	2-1-08
APP'D BY		SCALE	FULL
MATERIAL	BRASS		
FINISH	NICKEL		
DESCRIPTION	50P-XXXX: PROG. ATTEN.		

PROPRIETARY INFORMATION

ALL SURFACES ARE TO BE FREE OF BURRS, PITS, & SCRATCHES

TOLERANCES

FRACTIONAL DIM.	± 1/64
2 PLACE DECIMAL	± .010
3 PLACE DECIMAL	± .005
ANGULAR DIM.	± 1/2 °

DWG NO. 092-5702-03