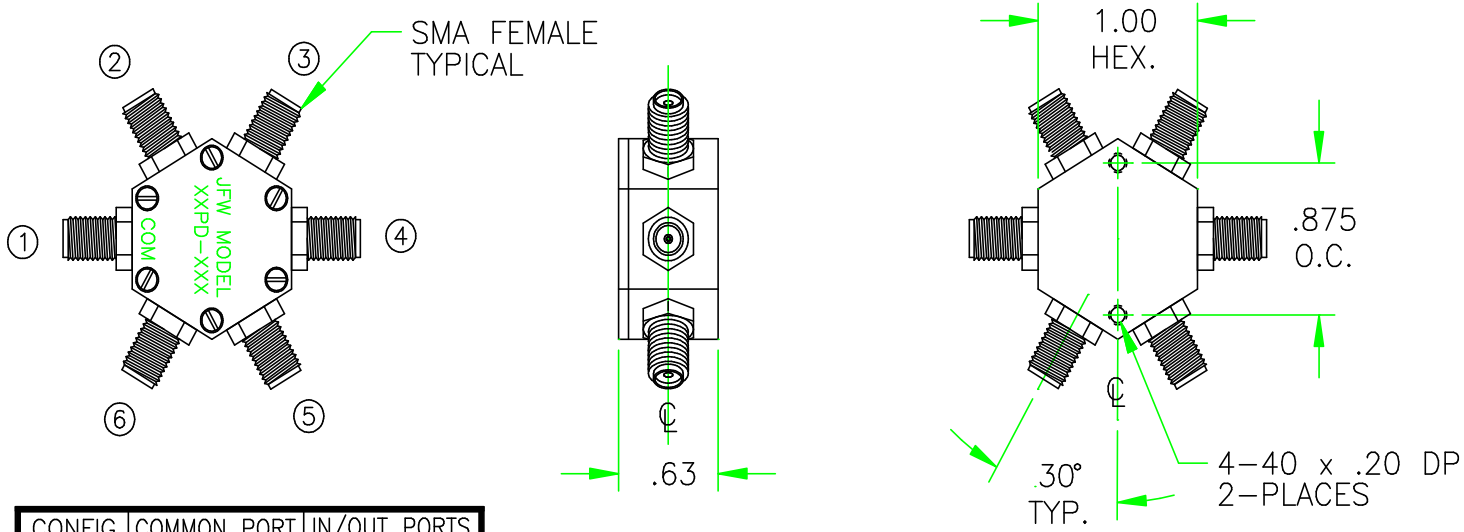

CONFIG.	COMMON PORT	IN/OUT PORTS
2 WAY	1	3,5
3 WAY	1	3,4,5
4 WAY	1	2,3,5,6
5 WAY	1	2,3,4,5,6

JFW INDUSTRIES, INC.
INDIANAPOLIS, IN

REV	ECN	DATE	BY	REV	ECN	DATE	BY
A	5487	11-26-97	CDJ	L	13019	7-14-06	BZ
B	5605	3-12-98	TEZ				
C	5868	11-24-98	PT				
D	5898	1-11-99	PT				
E	6098	9-2-99	PT				
F	6208	4-5-00	PT				
G	7967	8-23-04	LT				
H	8002	9-09-04	LT				
J	12635	4-21-06	ETW				
K	12917	6-14-06	BZ				

DRAWN BY: CDJ
DATE: 11-26-97
APP'D BY:
SCALE: FULL
MATERIAL: ALUMINUM ALLOY
FINISH: CHEMFILM TCP
DESCRIPTION: 50PD-XXX & 75PD-XXX RESISTIVE POWER DIVIDER

PROPRIETARY INFORMATION
ALL SURFACES ARE TO BE FREE OF BURRS, PITS, & SCRATCHES

TOLERANCES
FRACTIONAL DIM. ± 1/64
2 PLACE DECIMAL ± .010
3 PLACE DECIMAL ± .005
ANGULAR DIM. ± 1/2°

DWG NO. 092-925