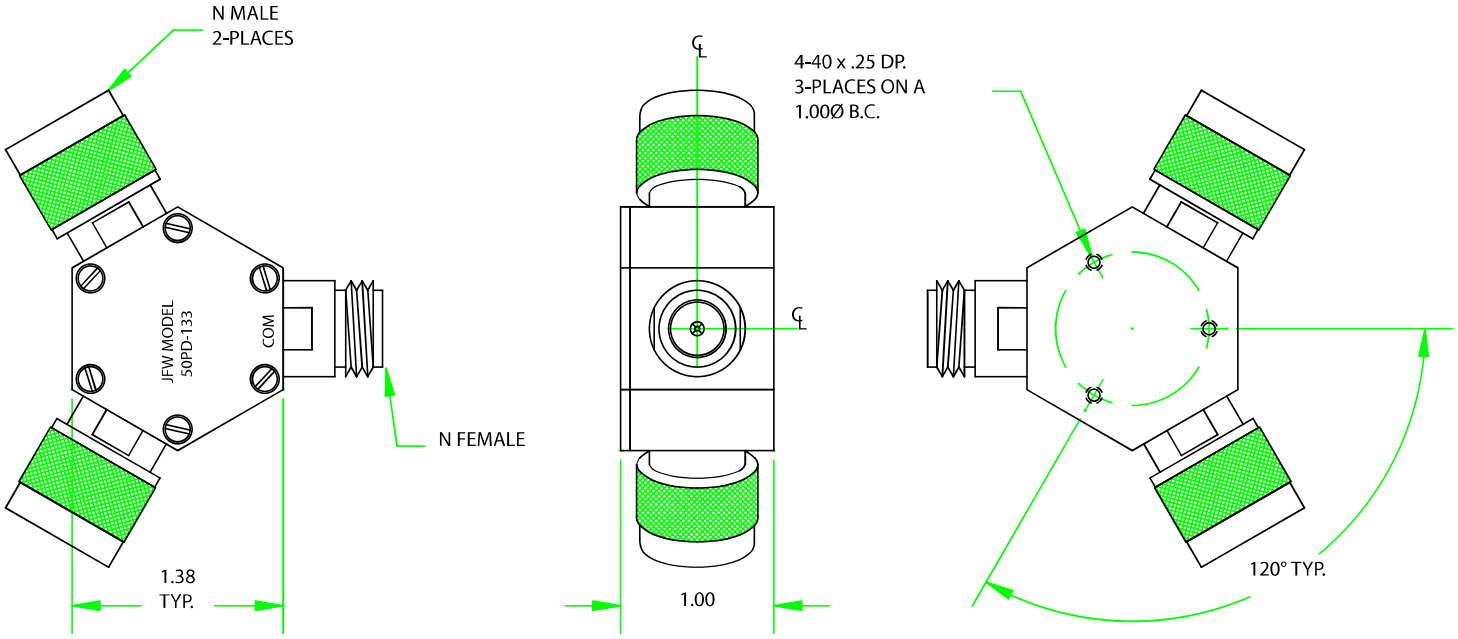

JFW INDUSTRIES, INC.

INDIANAPOLIS, IN

REV	ECN	DATE	BY
A	7104	4-24-02	TEZ
B	12635	4-21-06	ETW
C	13025	7-17-06	BZ

DRAWN BY	MIKE HUFF	DATE	4-08-02
APP'D BY		SCALE	FULL
MATERIAL	ALUMINUM ALLOY		
FINISH	CHEMFILM TCP		
DESCRIPTION	50PD-133 NF/NM-2 2 WAY POWER SPLITTER		

PROPRIETARY INFORMATION

ALL SURFACES ARE TO BE FREE OF BURRS, PITS, & SCRATCHES

TOLERANCES
FRACTIONAL DIM. ± 1/64
2 PLACE DECIMAL ± .010
3 PLACE DECIMAL ± .005
ANGULAR DIM. ± 1/2°

DWG NO. 092-3921