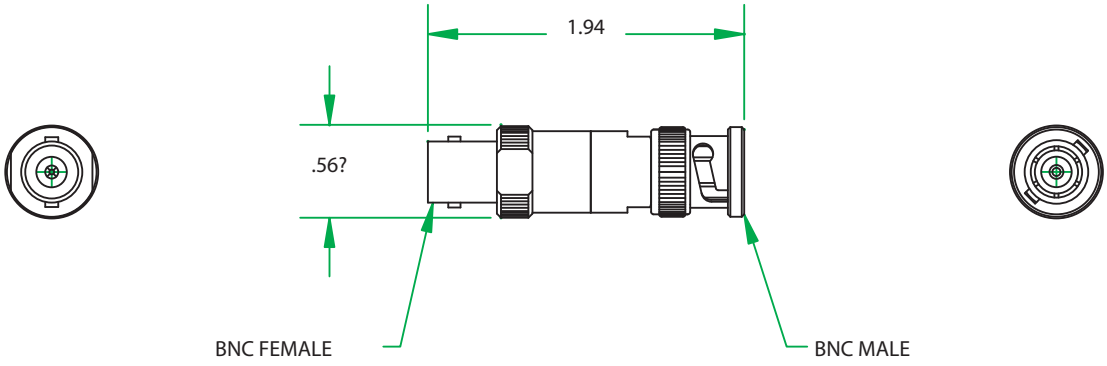

JFW INDUSTRIES, INC.
INDIANAPOLIS, IN

REV	ECN	DATE	BY
A	5793	9-14-98	CDJ

DRAWN BY: CDJ
DATE: 9-14-98
APP'D BY:
SCALE: FULL
MATERIAL:
FINISH:
DESCRIPTION: 50D & 75D DETECTOR
75FP FIXED ATTENUATOR

PROPRIETARY INFORMATION

ALL SURFACES ARE TO BE FREE OF BURRS, PITS, & SCRATCHES

TOLERANCES
FRACTIONAL DIM. ± 1/64
2 PLACE DECIMAL ±.010
3 PLACE DECIMAL ±.005
ANGULAR DIM. ± 1/2°

DWG NO. 092-233