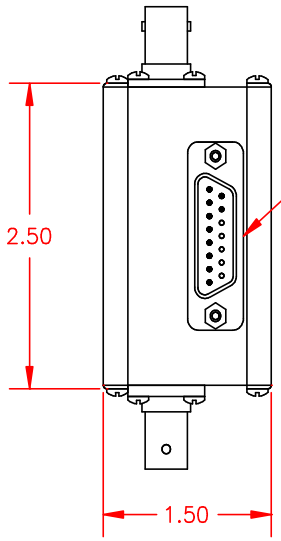

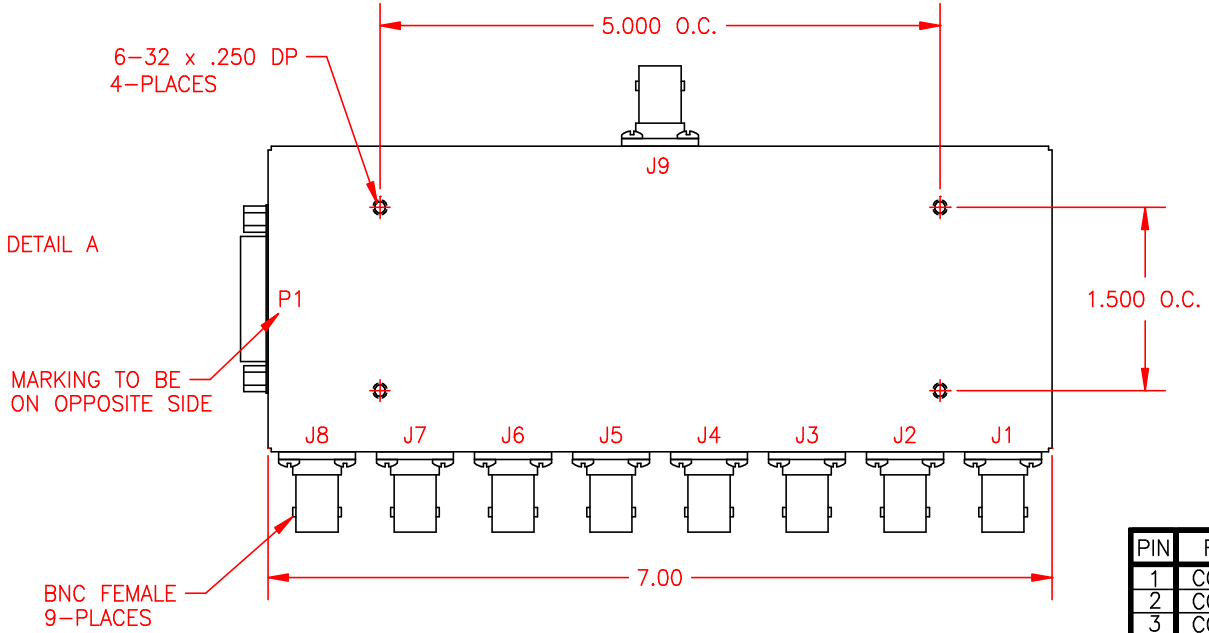

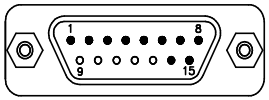

DETAIL A
DA–15P

PIN	FUNCTION
1	CONTROL 1
2	CONTROL 2
3	CONTROL 3
4	CONTROL 4
5	CONTROL 5
6	CONTROL 6
7	CONTROL 7
8	CONTROL 8
9	NO CONN.
10	NO CONN.
11	NO CONN.
12	NO CONN.
13	NO CONN.
14	+28 Vdc
15	GROUND

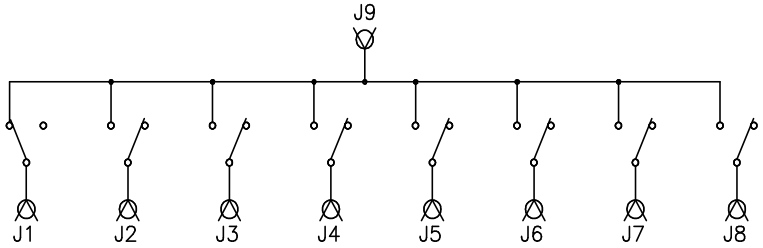

SHOWN WITH CONTROL 1 HIGH
(ALL CONTROLS ARE TTL)

JFW INDUSTRIES, INC.
INDIANAPOLIS, IN

REV	ECN	DATE	BY

DRAWN BY: TODD E. ZEISS
DATE: 17 AUGUST 95
APP'D BY:
SCALE: FULL
MATERIAL: BRASS
FINISH: NICKEL
DESCRIPTION: 75S–181
1P8T COAX. SWITCH

PROPRIETARY INFORMATION
ALL SURFACES ARE TO BE FREE OF BURRS, PITS, & SCRATCHES
TOLERANCES
FRACTIONAL DIM. ± 1/64
2 PLACE DECIMAL ± .010
3 PLACE DECIMAL ± .005
ANGULAR DIM. ± 1/2 °
DWG NO. 092–2357