ESTABLISHED RELIABILITY MILITARY TO-5 RELAYS SENSITIVE SPDT

SERIES	RELAY TYPE
431	SPDT basic relay
431D	SPDT relay with internal diode for coil transient suppression
431DD	SPDT relay with polarity reversal protection and coil transient suppression diode
431T	SPDT relay with internal transistor driver and coil transient suppression diode

DESCRIPTION

The TO-5 relay, originally conceived and developed by Teledyne, has become one of the industry standards for low-level switching from dry circuit to 1 ampere. Designed specifically for high-density PC board mounting, its small size and low coil power dissipation make the 431 relay one of the most versatile ultraminiature relays available.

The following unique construction features and manufacturing techniques provide excellent resistance to environmental extremes and overall high reliability.

The 431 feature:

- All welded construction.
- Unique uni-frame design, providing high magnetic efficiency and mechanical rigidity.
- High force/mass ratios for resistance to shock and vibration.
- Advanced cleaning techniques provide maximum assurance of internal cleanliness.
- Precious metal alloy contact material with gold plating assures excellent high current and dry circuit switching capabilities.

The Series 431D and 431DD relays have internal discrete silicon diodes for coil suppression and polarity reversal protection. The hybrid 431T relay features an internal silicon suppression diode and transistor driver. This hybrid package reduces required PC board floor space by reducing the number of external components needed to drive the relay.

By virtue of its inherently low intercontact capacitance and contact circuit losses, the 431 relay has proven to be an excellent ultraminiature RF switch for frequency ranges well into the UHF spectrum. A typical RF application for the TO-5 relay is in handheld radio transceivers, wherein the combined features of good RF performance, small size, low coil power dissipation and high reliability make it a preferred method of T-R switching

ENVIRONMENTAL AND PHYSICAL SPECIFICATIONS

Temperature (Ambient)	–65°C to +125°C
Vibration (Note 1)	30 g's to 500 Hz
Shock (Note 1)	75 g's, 6ms half sine
Acceleration	50 g's
Enclosure	Hermetically sealed
Weight	0.109 oz. (3.09g) max.
Reflow Temperature	260°C max. temp. 1 min. max

INTERNAL CONSTRUCTION

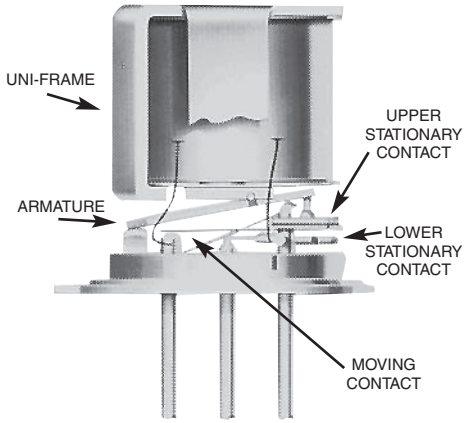

PART NUMBERING SYSTEM (5 & 6)

T²R Established Reliability Relays

ER 431 Y M4 - 26 A / S Q

- ER — Established Reliability Designator
- 431 — Relay Series
- Y — Ground Pin Option (See Appendix A)
- M4 — Pad Option (See Appendix A)
- 26 — Nominal Coil Voltage (5 = 5V) (12 = 12V) (26 = 26.5 V)
- A — Screening and Reliability Level (A or B)
- S — S = 0.187" Leads; W = 1.5" Leads; No Suffix = 0.75" Leads
- Q — Q = Solder-Coated Leads (Sn60/Pb40); R = RoHS Compliant Solder (Sn99.7/Cu0.7); No Suffix = Gold-plated Leads

Military Qualified (JAN) Relays

J 431 M3 - 26 P L / Q

- J — Military (JAN) Designator
- 431 — Relay Series
- M3 — Pad Option (See Appendix A)
- 26 — Nominal Coil Voltage (5 = 5V) (12 = 12V) (26 = 26.5 V)
- P — P = 0.187" Leads; W = 1.5" Leads; No Suffix = 0.75" Leads
- L — Screening and Reliability Level (L or M)
- Q — Q = Solder-Coated Leads (Sn60/ Pb40); No Suffix = Gold-Plated Leads

GENERAL ELECTRICAL SPECIFICATIONS (-65 °C to 125 °C unless otherwise noted. See notes 2 & 3.)

Contact Arrangement		1 Form C (SPDT)	
Rated Duty		Continuous	
Contact Resistance		0.1 Ω max.; 0.2 Ω max. afterlife at A / 28 Vdc	
Contact Load Rating (DC)		Resistive: 1 A/ 28 Vdc Inductive: 200 mA/ 28 Vdc (320mH) Lamp: 100 mA / 28 Vdc (320mH) Low level: 10 to 50 µA @ 10 to 50 mV	
Contact Load Rating (AC)		Resistive: 250 mA / 115Vac, 60 and 400 Hz (Case not grounded) 100 mA / 115 Vac, 60 and 400 Hz (Case grounded)	
Contact Life Ratings		10,000,000 cycles (typical) at low level 1,000,000 cycles (typical) at 0.5 A / 28 Vdc resistive 100,000 cycles min. at all other loads specified above	
Contact Overload Rating		2 A / 28 Vdc Resistive (100 cycles min.)	
Coil Operating Power		150 mW typical at nominal rated voltage	
Contact Carry Rating		Contact Factory	
Operate Time	**431** **431D** **431DD**	4.0 ms max.	
	431T	3.5 ms max.	
Release Time	**431**	2.5 ms max.	
	431D **431DD** **431T**	7.5 ms max.	
Contact Bounce		1.5 ms max.	
Intercontact Capacitance		0.4 pf typical	
Insulation Resistance		10,000 MΩ min. between mutually isolated terminals	
Dielectric Strength (V_{rms}/60 Hz)		Atmospheric pressure : 500	70,000 ft : 125
Negative Coil Transient (Vdc)	**431D** **431DD** **431T**	1.0 max.	
Diode P.I.V (Vdc)	**431D** **431DD** **431T**	100 min.	
431 Transistor Characteristics		Base Turn Off Voltage (Vdc)	0.3 min
		Emitter-Base breakdown Voltage (BV_{EBO}) (Vdc)	6.0 min
		Collector-Base breakdown Voltage (BV_{CBO}) (Vdc) (Ic = 100µA)	75 min

PERFORMANCE CURVES (Note 2)

TYPICAL RF PERFORMANCE

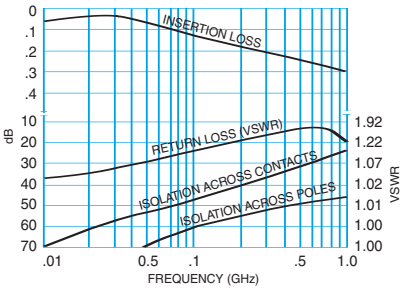

FIGURE 1

TYPICAL DC CONTACT RATING (RESISTIVE)

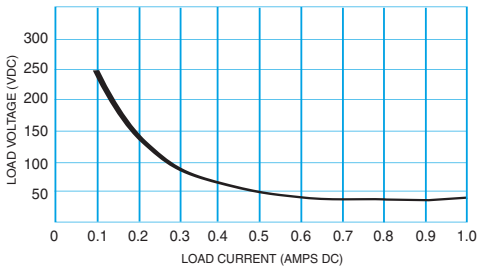

FIGURE 2

SERIES 431
DETAILED ELECTRICAL SPECIFICATIONS (-65 °C to 125 °C unless otherwise noted. See note 3.)

BASE PART NUMBERS (431, 431D, 431DD)			431-5 431D-5 431DD-5 431T-5	431-12 431D-12 431DD-12 431T-12	431-26 431D-26 431DD-26 431T-26
Coil Voltage	Nom.		5.0	12.0	26.5
	Max.		8.0	22.0	45.0
Coil Resistance (Ohms ±10%)	431 431D 431T		125	1025	4000
	431DD (Note 4)		100	1025	4000
Coil Current	431DD	Min	36.3	9.7	5.7
		Max	47.8	13.6	7.7
Pick-Up Voltage (V_{dc}, max.)	431 431D		3.7	9.0	18.0
	431DD		4.5	10.0	19.0
	431T		3.6	10.0	19.0
Drop-Out Voltage	Min.		0.15	0.4	0.89
	Max.		2.4	5.6	10.4
Turn On Base Current (mA_{dc}, Max.) (Note 7)	431T		2.38	0.8	0.40

NOTES:
1. Relay contacts will exhibit no chatter in excess of 10 µsec or transfer in excess of 1 µsec.
2. “Typical” characteristics are based on available data and are best estimates. No on-going verification tests are performed.
3. Unless otherwise specified, parameters are initial values.
4. Reference only for 431DD and 431T. Coil resistance not directly measurable at relay terminals due to internal series semiconductor.
5. Unless otherwise specified, relays will be supplied with gold-plated leads.
6. The slash and characters appearing after the slash are not marked on the relay.
7. Limit Base Emitter current to 15 mA_{dc} max.

OUTLINE DIMENSIONS

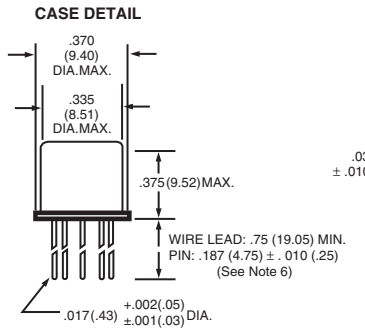

Dimensions: in. (mm)

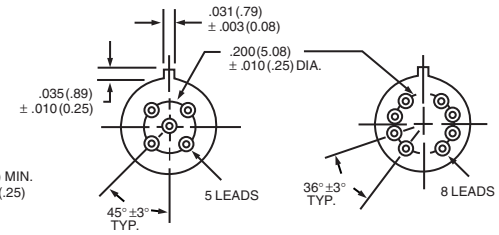

431, 431D, 431DD 431T

(Viewed From Terminals)

TYPICAL LOGIC INTERFACE

(See Note 7)

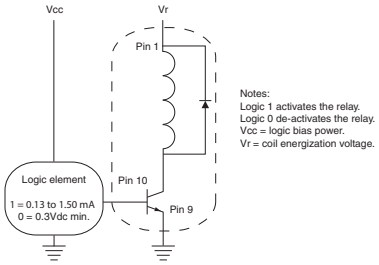

SCHEMATIC DIAGRAMS

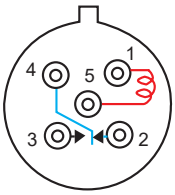

431

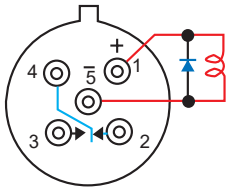

431D

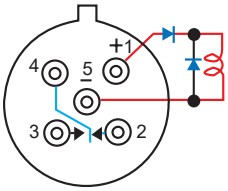

431DD

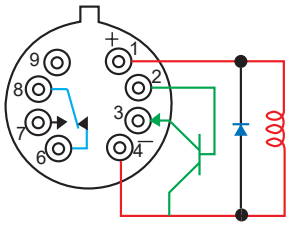

431T

APPENDIX A : Spacer Pads

Pad designation and bottom view dimensions	Height	For use with the following:	Dim. H Max.
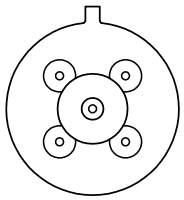 “M4” Spacer Pad for TO-5	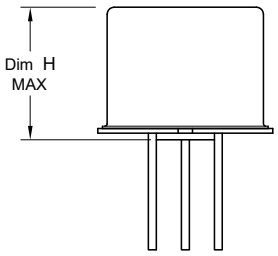	ER431, J431	.400 (10.16)

Notes:
1. Spacer pad material: Polyester film.
2. To specify an “M4” spacer pad, refer to the mounting variants portion of the part numbering example in the applicable datasheet.
3. Dimensions are in inches (mm).
4. Unless otherwise specified, tolerance is ± .010” (.25 mm).
5. Add 10 mΩ to the contact resistance shown in the datasheet.
6. Add 0.01 oz. (0.25 g) to the weight of the relay assembly shown in the datasheet.

APPENDIX: Ground Pin Positions

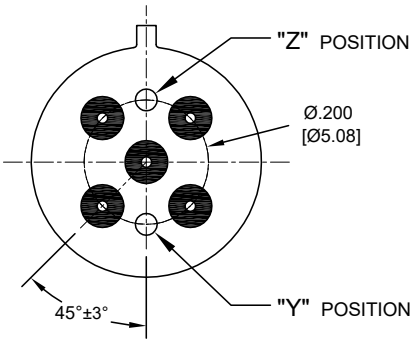

○ Indicates ground pin position

● Indicates glass insulated lead position

◎ Indicates ground pin or lead position depending on relay type

NOTES
1. Terminal views shown
2. Dimensions are in inches (mm)
3. Tolerances: ± .010 (±.25) unless otherwise specified
4. Ground pin positions are within .015 (0.38) dia. of true position
5. Ground pin head dia., 0.035 (0.89) ref: height 0.010 (0.25) ref.
6. Lead dia. 0.017 (0.43) nom.